5th Grade · Art

One-Point Perspective: The Road Home

A step-by-step drawing project

Artists use **one-point perspective** to make a flat drawing look deep, like you could walk right into it. This week, draw the road that leads to a holiday gathering!

1 Draw a **horizon line** across the page, a little above the middle. This is where land meets sky.



2 Put a dot in the middle of the horizon line. This is the **vanishing point**. Everything shrinks toward it.

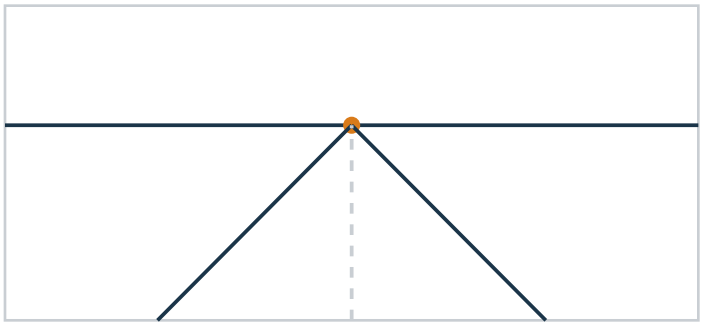

3 Draw two lines from the bottom of the page to the vanishing point. That is the **road**. Add a dashed center line.

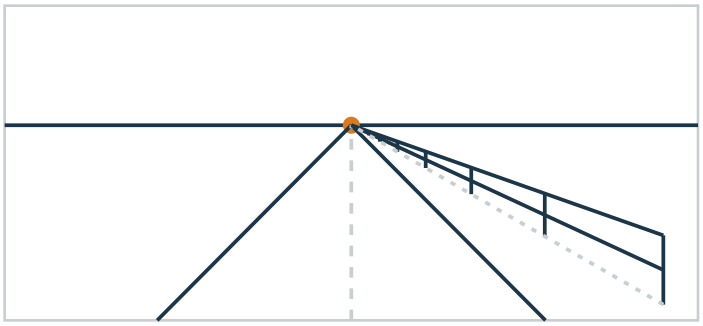

4 Draw **fence posts** on the right. Each one is shorter and closer together as it gets near the vanishing point. Connect the tops to the point.

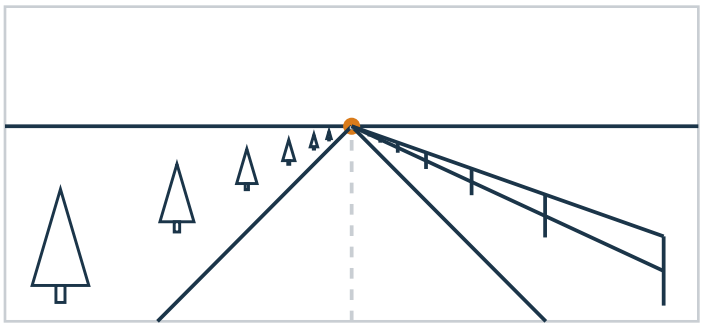

5 Add **trees** on the left. Big in the **foreground**, tiny in the **background**.

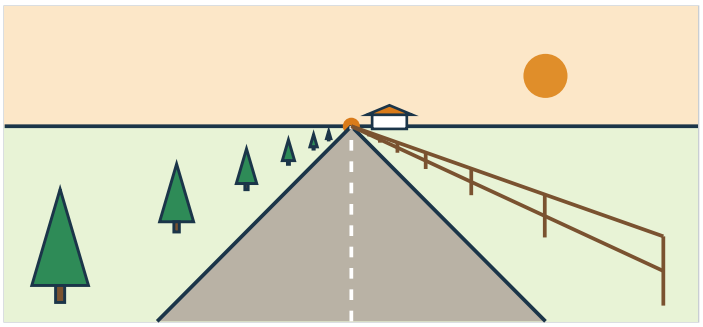

6 Add Grandma's house near the vanishing point, a sunset sky, and color! Warm colors in the sky, cool greens on the land.

THE HOMESCHOOL SAFARI © Homeschool Safari® · homeschoolsafari.com · Personal/classroom use only · See Terms of Use

5th Grade · Art

My Road Home Drawing

Use the horizon line and vanishing point to start.

Name: _____ Date: _____

horizon line

vanishing point

Title of my artwork: _____

THE HOMESCHOOL SAFARI © Homeschool Safari® · homeschoolsafari.com · Personal/classroom use only · See Terms of Use

5th Grade · Art

Perspective Words and Self-Check

Match each art word to its meaning, then check your drawing.

Name: _____ Date: _____

Example

Look down a long hallway or a straight road. The sides seem to come together far away. That meeting spot is the **vanishing point**.

1. horizon line	☐	**A.** lines that lead back to the vanishing point
2. vanishing point	☐	**B.** the part of a picture that looks farthest away
3. orthogonal lines	☐	**C.** the line where the land or water meets the sky
4. foreground	☐	**D.** the part of a picture that looks closest to you
5. background	☐	**E.** the spot on the horizon where lines seem to disappear

Check your drawing (put a check in each box):

- ☐ My road lines meet at the vanishing point.
- ☐ My fence posts get shorter as they go back.
- ☐ My trees are big in front and small far away.
- ☐ I used warm colors in the sky and cool colors on the land.
- ☐ I gave my artwork a title.

Safari Challenge

Draw a second scene with the vanishing point on the **left** side of the horizon. How does it change the picture?

THE HOMESCHOOL SAFARI © Homeschool Safari® · homeschoolsafari.com · Personal/classroom use only · See Terms of Use

Perspective Words and Self-Check

5th Grade · Art

ANSWER KEY

Match each art word to its meaning, then check your drawing.

Name: _____ Date: _____

Example

Look down a long hallway or a straight road. The sides seem to come together far away. That meeting spot is the **vanishing point**.

1. horizon line	C	**A.** lines that lead back to the vanishing point
2. vanishing point	E	**B.** the part of a picture that looks farthest away
3. orthogonal lines	A	**C.** the line where the land or water meets the sky
4. foreground	D	**D.** the part of a picture that looks closest to you
5. background	B	**E.** the spot on the horizon where lines seem to disappear

Check your drawing (put a check in each box):

- ☐ My road lines meet at the vanishing point.
- ☐ My fence posts get shorter as they go back.
- ☐ My trees are big in front and small far away.
- ☐ I used warm colors in the sky and cool colors on the land.
- ☐ I gave my artwork a title.

Safari Challenge

Draw a second scene with the vanishing point on the **left** side of the horizon. How does it change the picture?

THE HOMESCHOOL SAFARI © Homeschool Safari® · homeschoolsafari.com · Personal/classroom use only · See Terms of Use

MORE FROM HOMESCHOOL SAFARI

THE HOMESCHOOL SAFARI

Thank you for learning with us! We love helping families learn, grow, and thrive together.

Safari Station

Hands-on learning adventures and resources for your homeschool days.

Lion's Library

Hundreds of printables, games and digital books for PreK-6, sorted by grade and skill.

Private Lessons

One-on-one lessons with a certified teacher, tailored to your child.

homeschoolsafari.com · info@homeschoolsafari.com

Terms of Use

THE HOMESCHOOL SAFARI

All digital and printable resources from Homeschool Safari® are owned by Homeschool Safari® and are protected by copyright laws.

PLEASE READ CAREFULLY.

By purchasing, downloading, or using any resource from Homeschool Safari®, you agree to the following Terms of Use.

1. LICENSE TO USE

When you purchase or download a resource from Homeschool Safari®, you are granted a non-transferable, revocable license to download, print, and use the materials solely for personal or educational purposes. You may use the resources within your homeschool, classroom, co-op, or educational program.

2. PERMITTED USE

You may:

- Use the resources with your own children/students.
- Make copies for your own children/students.
- Share the resources with students in your own classroom, co-op, or educational program.
- Reference the resources in blog posts, social media, or presentations with proper credit to Homeschool Safari® and a link to our website.

3. PROHIBITED USE

You may not:

- Share, upload, or distribute the resources to others who have not purchased or obtained them legally.
- Post the resources on any public website, file-sharing site, or cloud storage.
- Copy, modify, alter, or claim the resources as your own.
- Sell, resell, lease, or sublicense the resources (in printed or digital form).
- Remove copyright, watermark, or branding from the resources.
- Use the resources for commercial purposes, including resale or as part of another product or service.

4. COPYRIGHT

All content provided by Homeschool Safari® (including printables, lessons, graphics, text, videos, and digital products) is copyrighted. All rights are reserved. This license does not transfer ownership of the materials to you.

5. MODIFICATIONS

You may not modify, edit, or create derivative works based on our resources for the purpose of sharing, selling, or distributing without written permission from Homeschool Safari®.

6. DIGITAL SECURITY

You may not attempt to bypass, break, or circumvent any security measures on our website or digital products. Violating these terms may result in termination of access and/or legal action.

7. DISCLAIMER

Our resources are provided for educational and informational purposes only. Homeschool Safari® is not responsible for how the materials are used or for any outcomes resulting from their use.

8. CHANGES TO TERMS

We reserve the right to update these Terms of Use at any time. Updates will be posted on this page with the revised date. Continued use of our resources constitutes acceptance of the updated terms.

9. VIOLATIONS

Failure to follow these terms may result in immediate revocation of your license to use our resources and may subject you to legal action.

10. CONTACT

If you have any questions about these Terms of Use, please contact us at:
info@homeschoolsafari.com

BRANDS & COLLABORATIONS



CONNECT WITH US

homeschoolsafari.com

QUESTIONS?

We're here to help!
Email us anytime at
info@homeschoolsafari.com

Thank you for respecting our work and supporting our mission to help families learn, grow, and thrive together.